TRLR70US

MQ POWER Tandem Axle Trailer

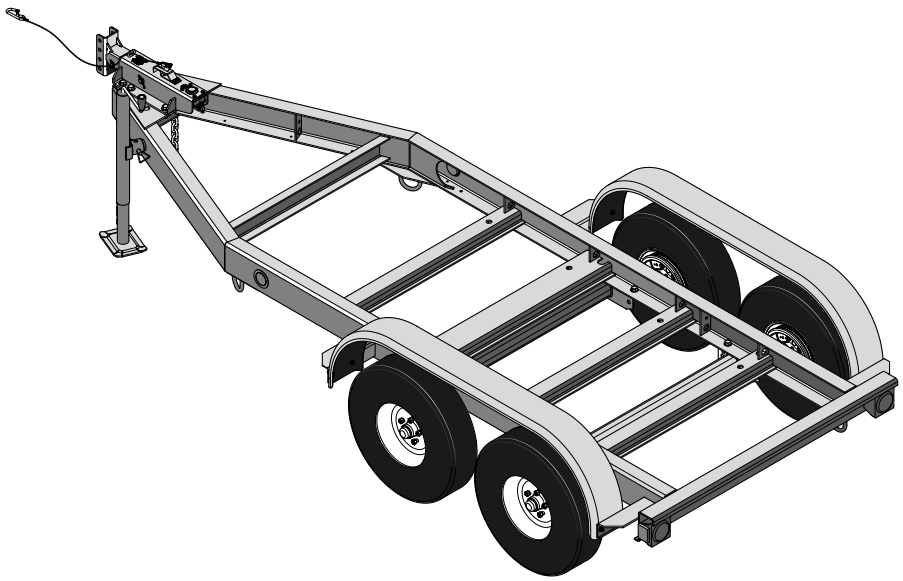

TRLR70US Technical Data	
Gross Vehicle Weight Rating (GVWR) — 7,000 lbs. (3,175 kg)	Tire Size — ST205/75D15 LR-C
Gross Axle Weight Rating (GAWR) — 3,500 lbs. (1,588 kg) (ea.)	Wheel Bolt Pattern — 5 Lug on 4.5 in
Actuator Rating — 8,000 lbs. (3,629 kg)	Tire Load Rating — 1,820 lbs/825 kg (ea.)
Coupler Rating — See coupler options on back page.	Dimensions (LxWxH) — See Dimensions on back page.

STANDARD TRAILER FEATURES

- Fits MQ Power Generator Models DCA70SSIU4F, DCA70SSJU4i, DCA70USI3CAN
- Tandem-axle Design with Torsion Type Suspension
- H.D. Welded Steel Frame Construction
- Form Channel for Generator Mounting and Support
- Replaceable, Bolt-on Hydraulic Brake Actuator
- Surge Hydraulic-actuated Drum Brakes (all axles)
- Hydraulic Uni-Servo Drum Brakes with Free-backing Plates - 10-inch Cluster
- D.O.T. Steel Brake Lines, Brass Tees & Rubber Hydraulic Brake Hoses
- 4-hole Channel Allows 3-position, Adjustable Coupler Height; 4-inches O/A
- Tongue Mounted Swivel Jack with Flat Disc-foot (rated 3,000 pound lift)
- Replaceable, Bolt-on Steel Fenders and Brackets
- Serviceable Torsion-axle Swing Arms
- Powder Coat Paint Process including: Frame, Channel, Actuator & Fenders
- D.O.T. Approved Tail Lamps, Stop Lamps, Turn Signal Lamps, Side Marker Lamps
- Weatherproof, Rubber Armored, 2-piece Trailer Light Wiring Harness

TRLR70US

MQ POWER Tandem Axle Trailer

OPTIONAL TRAILER EQUIPMENT

- Bolt-on Electric Brake Coupler Plate with Electric-actuated Drum Brakes (all axles)
- Electric Breakaway Safety Device (electric-actuated brakes)
- Adjustable 2-inch Ball Coupler
- Adjustable 2 5/16-inch Ball Coupler
- Adjustable 3-inch Pintle-eye Coupler
- Rear Stabilizer Stands
- Tongue Mounted Utility Storage Box
- Anti-Theft Wheel Lock
- Spare Tire with Locking Mount

Coupler Options

3" Pintle Eye 25,000 lbs. #EE36264	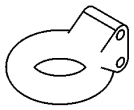
2" Ball Coupler 10,000 lbs. #EE43254	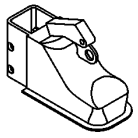
2-5/16" Ball Coupler 14,000 lbs. #EE43253	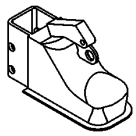

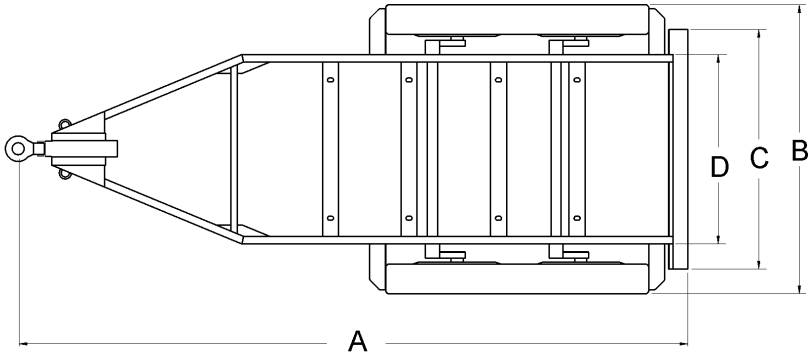

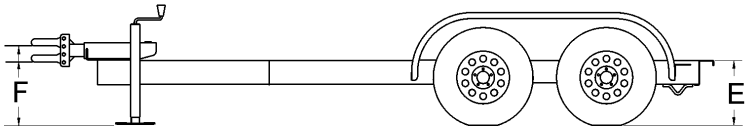

Trailer Dimensions						
A	B	C	D	E	F	
					MIN	MAX
169.4 in (4,938 mm)	72.5 in (1,842 mm)	60 in (1,524 mm)	47.5 in (1,207 mm)	20.35 in (517 mm)	20.2 in (513 mm)	24.2 in (615 mm)

Trailer Weight
960 lbs. (435 kg)*

**Weight is approximate*

.

Your Multiquip dealer is:

© COPYRIGHT 2015 MULTIQUIP INC.

TRLR70US Rev. #5 (07/21/15)

MULTIQUIP
POST OFFICE BOX 6254
CARSON, CA 90749
310-537-3700 • 800-883-2551
FAX: 310-604-3831
E-MAIL: sales@multiquip.com
WEBSITE: www.multiquip.com